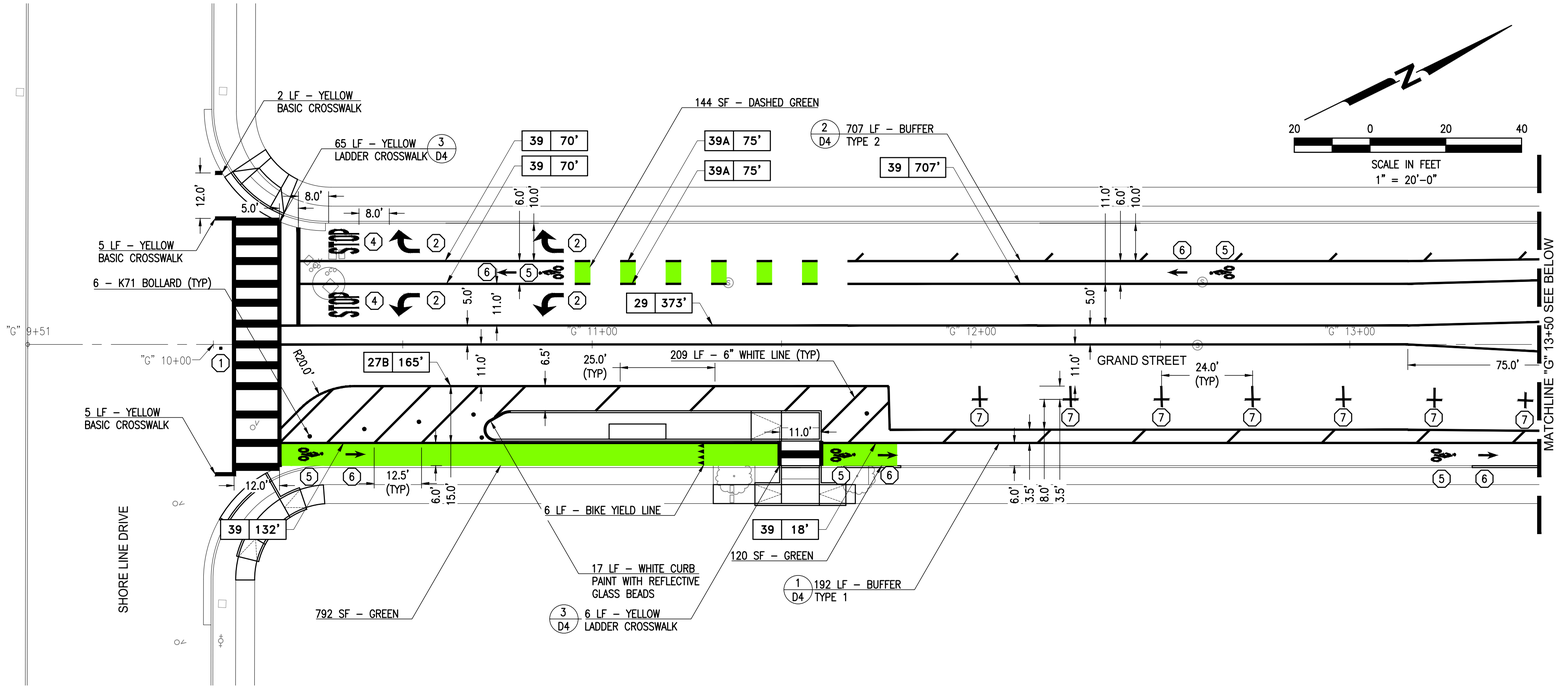

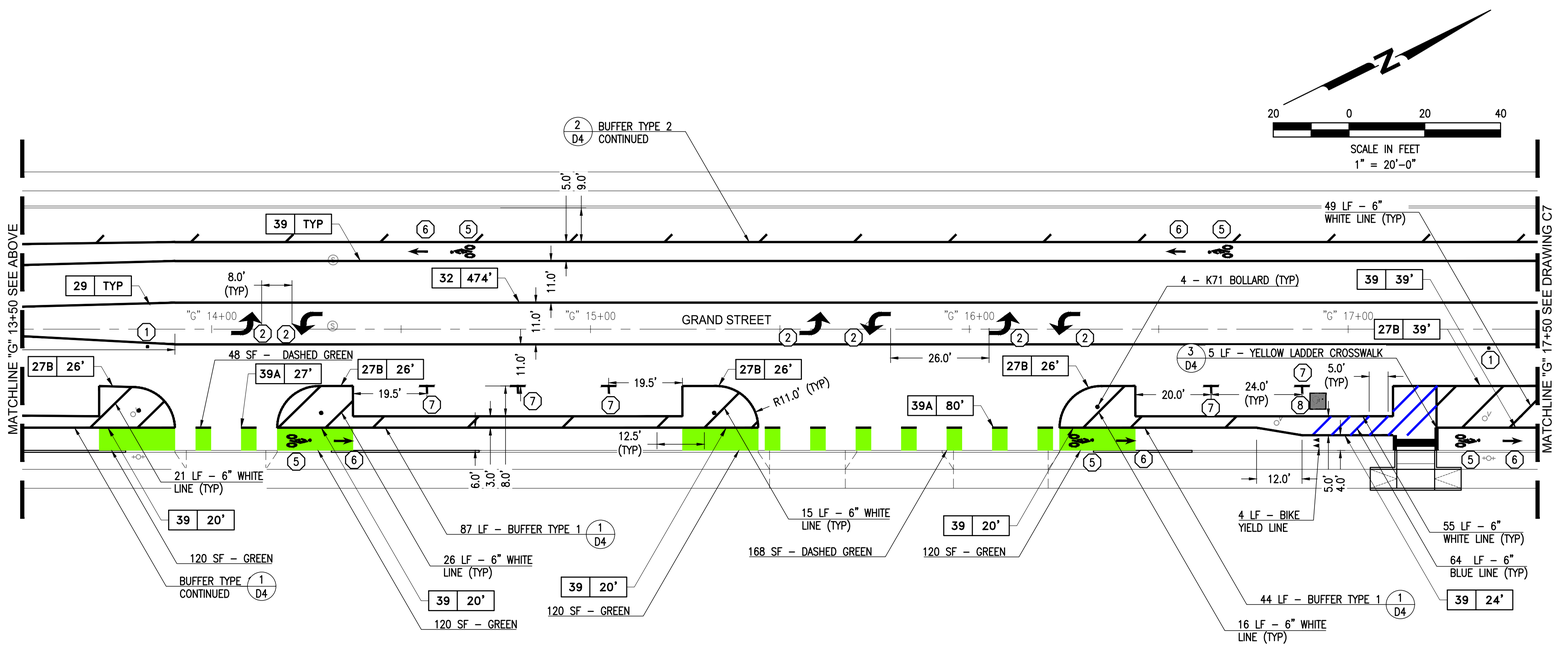

NOTES:

1. FOR GENERAL NOTES, LEGEND AND ABBREVIATIONS, SEE SHEET 2.
2. CONTRACTOR SHALL REMOVE "BIKE ROUTE" (D11-1) SIGNAGE ALONG GRAND STREET.

KEYNOTES:

1. INSTALL FIRE HYDRANT BLUE MARKER
2. INSTALL CALTRANS "TYPE IV" ARROW
3. INSTALL CALTRANS "TYPE VII" ARROW
4. INSTALL CALTRANS PAVEMENT MARKING "STOP"
5. INSTALL CALTRANS BIKE LANE SYMBOL WITH PERSON
6. INSTALL CALTRANS BIKE LANE ARROW
7. INSTALL PARKING "T"; SEE DETAIL 4/D4
8. INSTALL CALTRANS ISA MARKING

65% SUBMITTAL
PRELIMINARY
FOR REVIEW
NOT FOR CONSTRUCTION
DATE: 11/05/2021

Know what's below. Call before you dig.

NCE
501 Canal Blvd., Suite I
Richmond, Ca. 94804
(510) 215-3620 * Fax (510) 215-2898

REGISTERED PROFESSIONAL ENGINEER RYAN KLAN No. C 62349 EXP. 09/30/20 CIVIL STATE OF CALIFORNIA

REGISTERED PROFESSIONAL ENGINEER JOHN RYAN BAYER No. C 62349 EXP. 09/30/21 CIVIL STATE OF CALIFORNIA

GRAND STREET OBAG 2 REHABILITATION

OWNER

950 W MALL SQUARE
ALAMEDA, CA. 94501

NO.	DATE	DESCRIPTION

PROJECT NO:	773.10.55
DESIGNED BY:	SD
DRAWN BY:	AP, SD
CHECKED BY: FH	DATE: 11/02/2021
DATE:	11/05/2021

This drawing is the property of NCE, including all patented and patentable features, and/or confidential information and its use is conditioned upon the user's agreement not to reproduce the drawing, in whole or part, nor the material described thereon, nor the use of the drawing for any purpose other than specifically permitted in writing by NCE.

SHEET TITLE

STRIPING GRAND STREET "G" 9+51 TO "G" 17+50

DRAWING

C6

SHEET 9 OF 19

File: P:\Active Projects\Alameda - 773\773.10.55 - Grand Street OBAG 2 Rehabilitation\CAD\Sheets\09 C6 - Striping Grand Street.dwg | Layout: C6 | Printed Nov 07, 2021 @ 8:22pm | ID:SD.22.0a (JMS Tech)

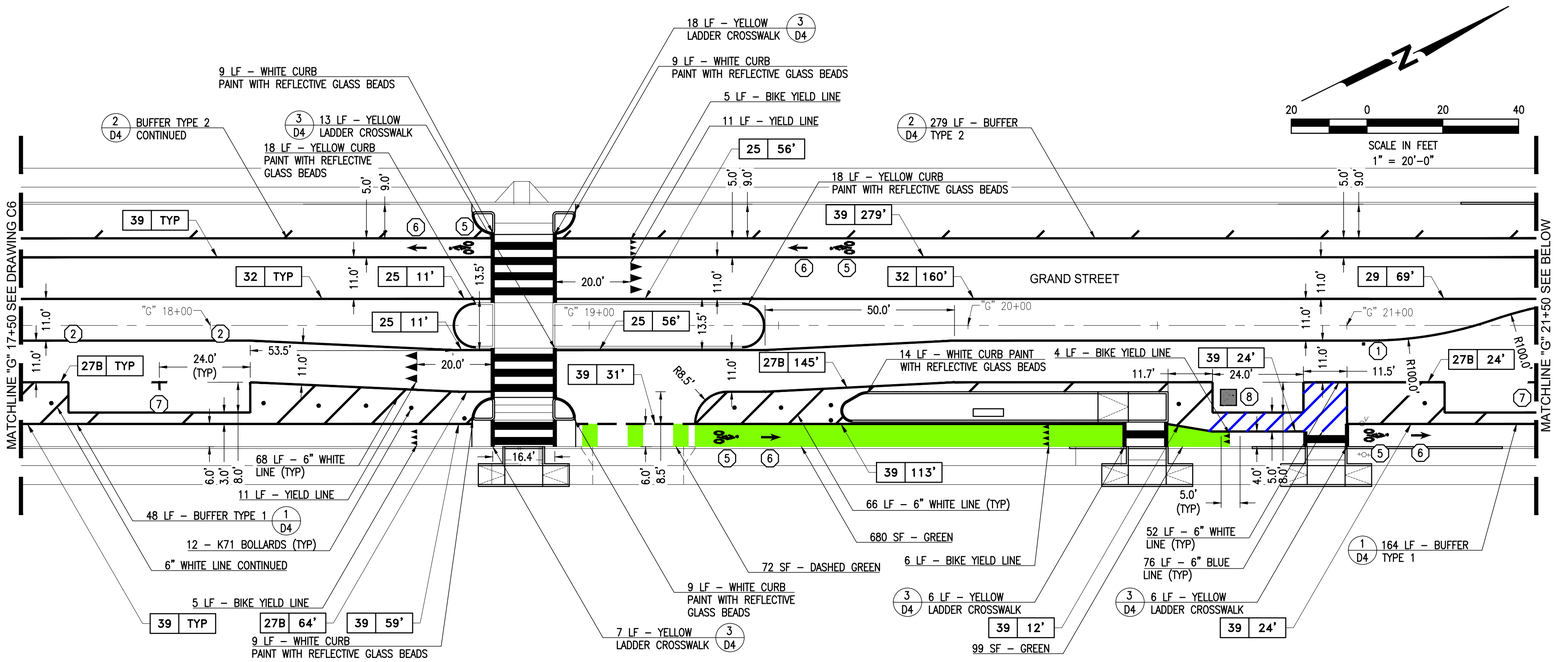

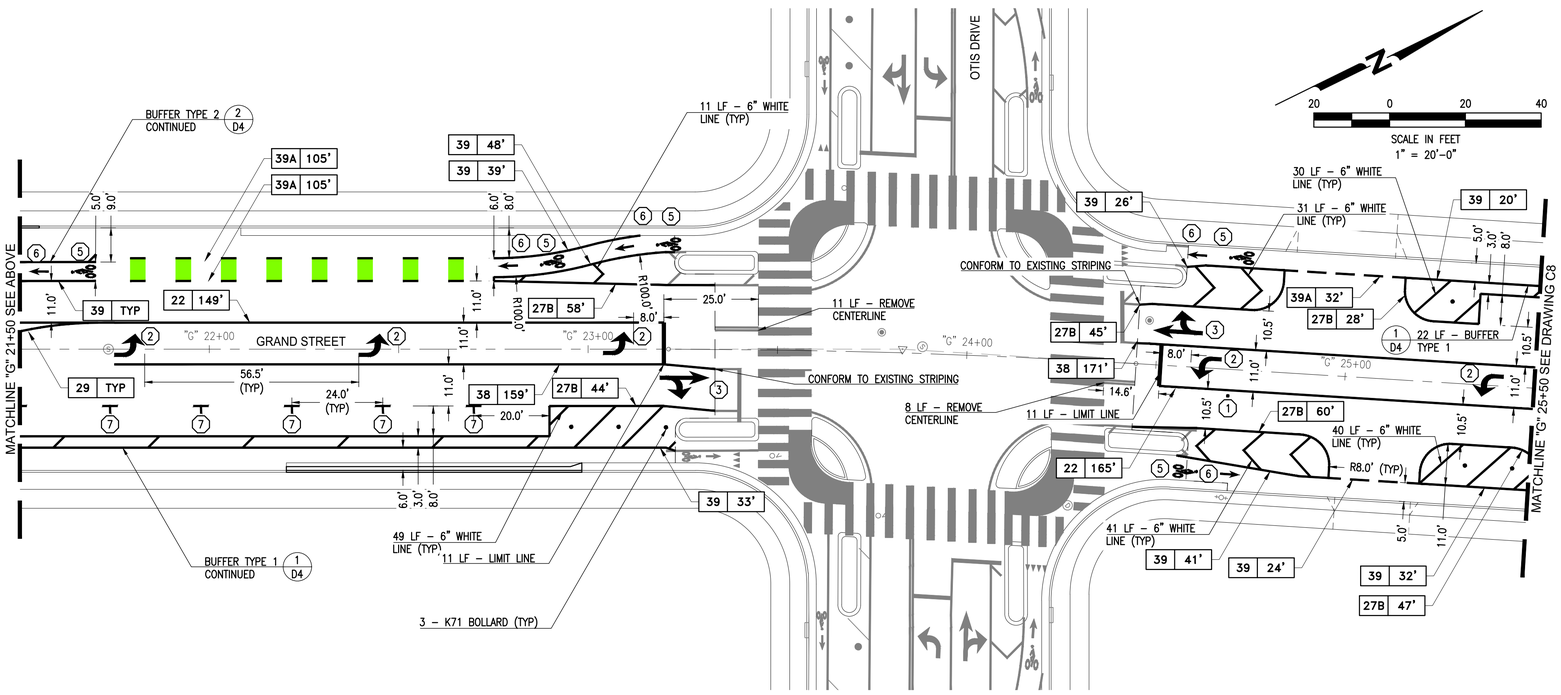

NOTES:

1. FOR GENERAL NOTES, LEGEND AND ABBREVIATIONS, SEE SHEET 2.
2. CONTRACTOR SHALL REMOVE "BIKE ROUTE" (D11-1) SIGNAGE ALONG GRAND STREET.

KEYNOTES:

1. INSTALL FIRE HYDRANT BLUE MARKER
2. INSTALL CALTRANS "TYPE IV" ARROW
3. INSTALL CALTRANS "TYPE VII" ARROW
4. INSTALL CALTRANS PAVEMENT MARKING "STOP"
5. INSTALL CALTRANS BIKE LANE SYMBOL WITH PERSON
6. INSTALL CALTRANS BIKE LANE ARROW
7. INSTALL PARKING "T"; SEE DETAIL 4/D4
8. INSTALL CALTRANS ISA MARKING

65% SUBMITTAL
PRELIMINARY
FOR REVIEW
NOT FOR CONSTRUCTION
DATE: 11/05/2021

Know what's below. Call before you dig.

NCE
501 Canal Blvd., Suite I
Richmond, Ca. 94804
(510) 215-3620 * Fax (510) 215-2898

REGISTERED PROFESSIONAL ENGINEER RYAN KLAN No. C 62349 EXP. 06/30/20 CIVIL STATE OF CALIFORNIA

REGISTERED PROFESSIONAL ENGINEER JOHN RYAN BAYER No. C 62349 EXP. 09/30/21 CIVIL STATE OF CALIFORNIA

GRAND STREET OBAG 2 REHABILITATION

OWNER

SEAL OF THE CITY OF ALAMEDA

950 W MALL SQUARE
ALAMEDA, CA. 94501

NO.	DATE	DESCRIPTION

PROJECT NO:	773.10.55
DESIGNED BY:	SD
DRAWN BY:	AP, SD
CHECKED BY: FH	DATE: 11/02/2021
DATE:	11/05/2021

This drawing is the property of NCE, including all patented and patentable features, and/or confidential information and its use is conditioned upon the user's agreement not to reproduce the drawing, in whole or part, nor the material described thereon, nor the use of the drawing for any purpose other than specifically permitted in writing by NCE.

SHEET TITLE

STRIPING GRAND STREET "G" 17+50 TO "G" 25+50

DRAWING

C7

SHEET 10 OF 19

File: P:\Active Projects\Alameda - 773\773.10.55 - Grand Street OBAG 2 Rehabilitation\CAD\Sheets\09 C6 - Striping Grand Street.dwg | Layout: C7 | Printed Nov 07, 2021 @ 8:22pm | ID:SD.22.0a (JMS Tech)

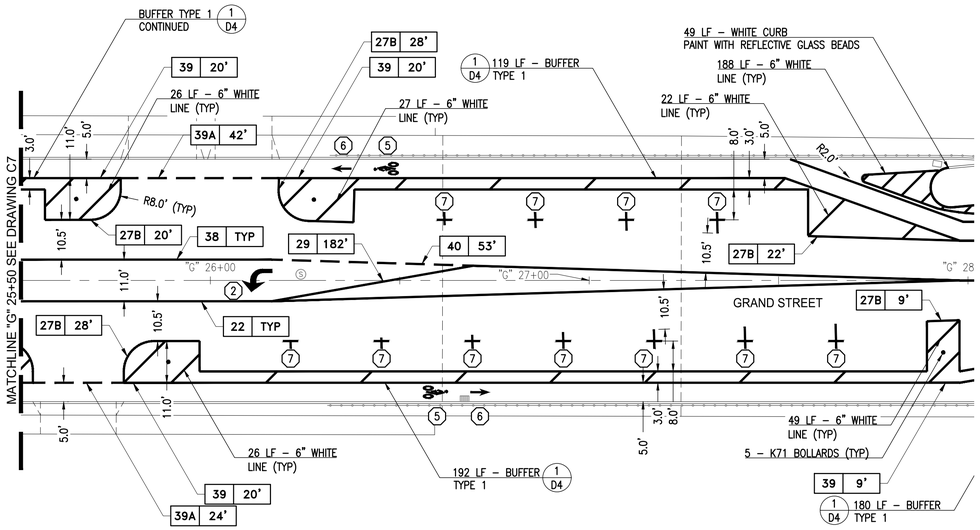

NOTES:

1. FOR GENERAL NOTES, LEGEND AND ABBREVIATIONS, SEE SHEET 2.
2. CONTRACTOR SHALL REMOVE "BIKE ROUTE" (D11-1) SIGNAGE ALONG GRAND STREET.

KEYNOTES:

1. INSTALL FIRE HYDRANT BLUE MARKER
2. INSTALL CALTRANS "TYPE IV" ARROW
3. INSTALL CALTRANS "TYPE VII" ARROW
4. INSTALL CALTRANS PAVEMENT MARKING "STOP"
5. INSTALL CALTRANS BIKE LANE SYMBOL WITH PERSON
6. INSTALL CALTRANS BIKE LANE ARROW
7. INSTALL PARKING "T"; SEE DETAIL 4/D4
8. INSTALL CALTRANS ISA MARKING

65% SUBMITTAL
PRELIMINARY
FOR REVIEW
NOT FOR CONSTRUCTION
DATE: 11/05/2021

Know what's below. Call before you dig.

NCE
501 Canal Blvd., Suite I
Richmond, Ca. 94804
(510) 215-3620 * Fax (510) 215-2898

REGISTERED PROFESSIONAL ENGINEER RYAN KLAN No. C 62349 EXP. 06/30/22 CIVIL STATE OF CALIFORNIA

REGISTERED PROFESSIONAL ENGINEER JOHN RYAN BAKER No. C 62349 EXP. 09/30/21 CIVIL STATE OF CALIFORNIA

GRAND STREET OBAG 2 REHABILITATION

OWNER

SEAL OF THE CITY OF ALAMEDA

950 W MALL SQUARE
ALAMEDA, CA. 94501

NO.	DATE	DESCRIPTION

PROJECT NO:	773.10.55
DESIGNED BY:	SD
DRAWN BY:	AP, SD
CHECKED BY: FH	DATE: 11/02/2021
DATE:	11/05/2021

This drawing is the property of NCE, including all patented and patentable features, and/or confidential information and its use is conditioned upon the user's agreement not to reproduce the drawing, in whole or part, nor the material described thereon, nor the use of the drawing for any purpose other than specifically permitted in writing by NCE.

SHEET TITLE

STRIPING GRAND STREET "G" 25+50 TO "G" 33+50

DRAWING

C8

SHEET 11 OF 19

File: P:\Active Projects\Alameda - 773\773.10.55 - Grand Street OBAG 2 Rehabilitation\CAD\Sheets\09 C6 - Striping Grand Street.dwg | Layout: C8 | Printed Nov 07, 2021 @ 8:25am | ID:SD.22.0a (LMS Tech)

STOP
STOP
Palmera Ct
STOP
Dayton Ave

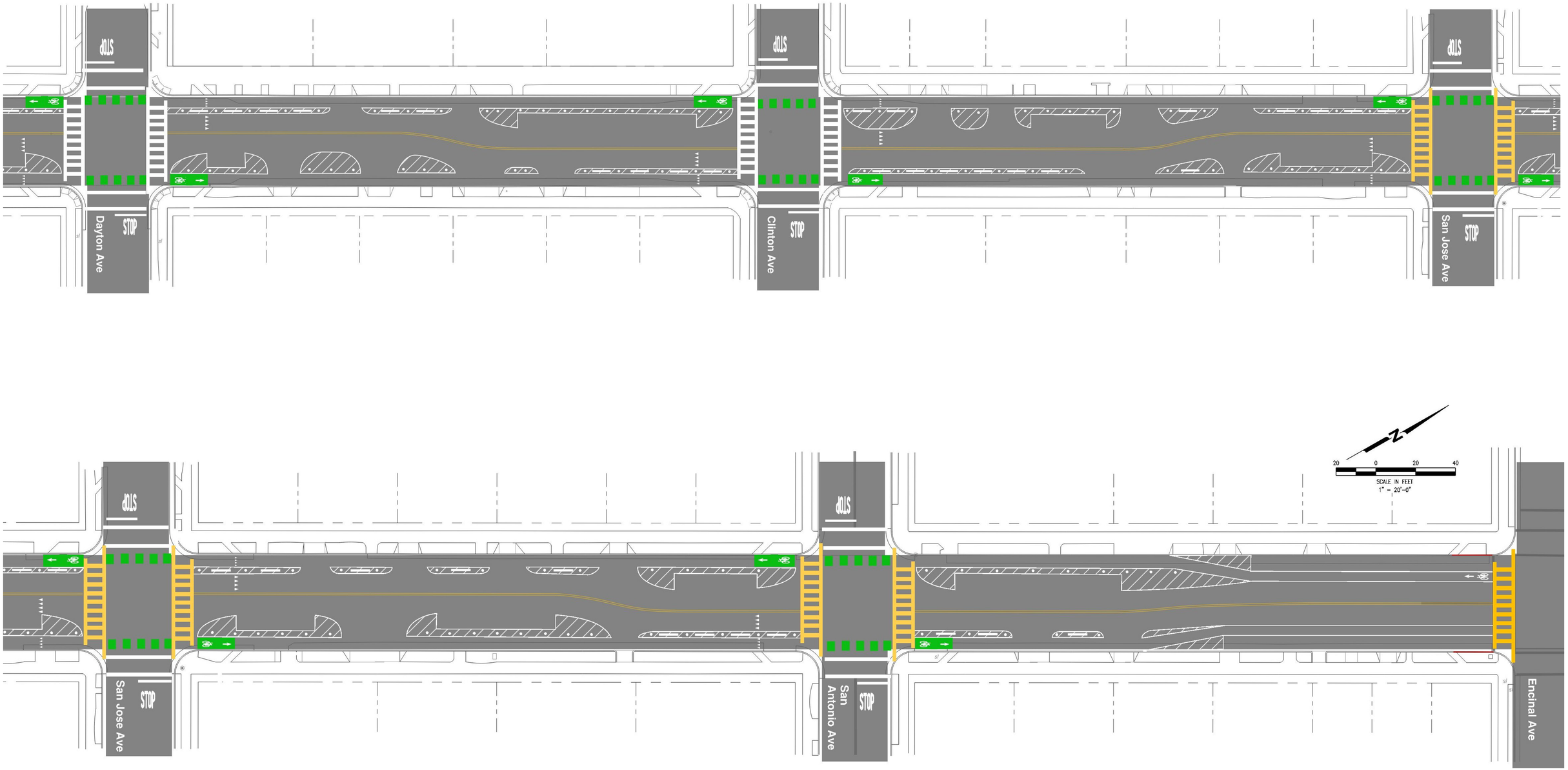
STOP
Dayton Ave
STOP
Clinton Ave
STOP
San Jose Ave
STOP
San Jose Ave
STOP
San Antonio Ave
STOP
Encinal Ave
N
20 0 20 40
SCALE IN FEET
1" = 20'-0"